CODING A
M 2:1

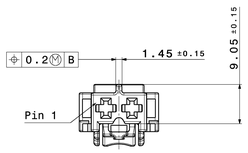

CODING B
M 2:1

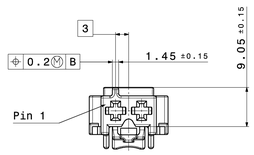

CODING C
M 2:1

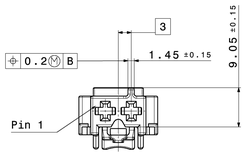

CODING D
M 2:1

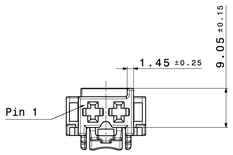

CODING E
M 2:1

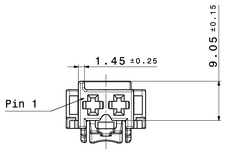

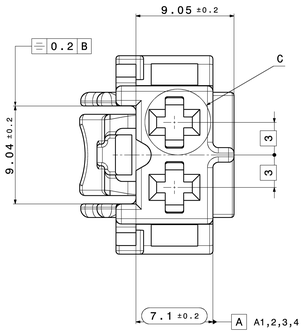

Detail C

M: 10:1

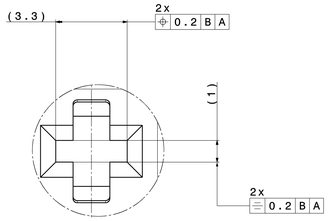

INLINE CONNECTION

M 1:1

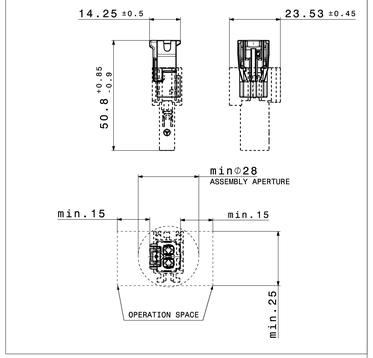

FLANGE CONNECTION

M 1:1

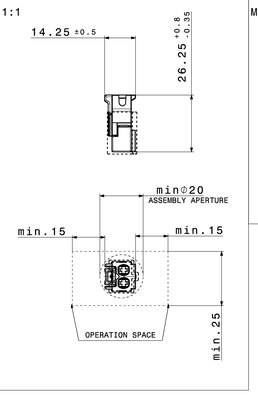

ISOMETRIC VIEW

M 2:1

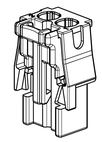

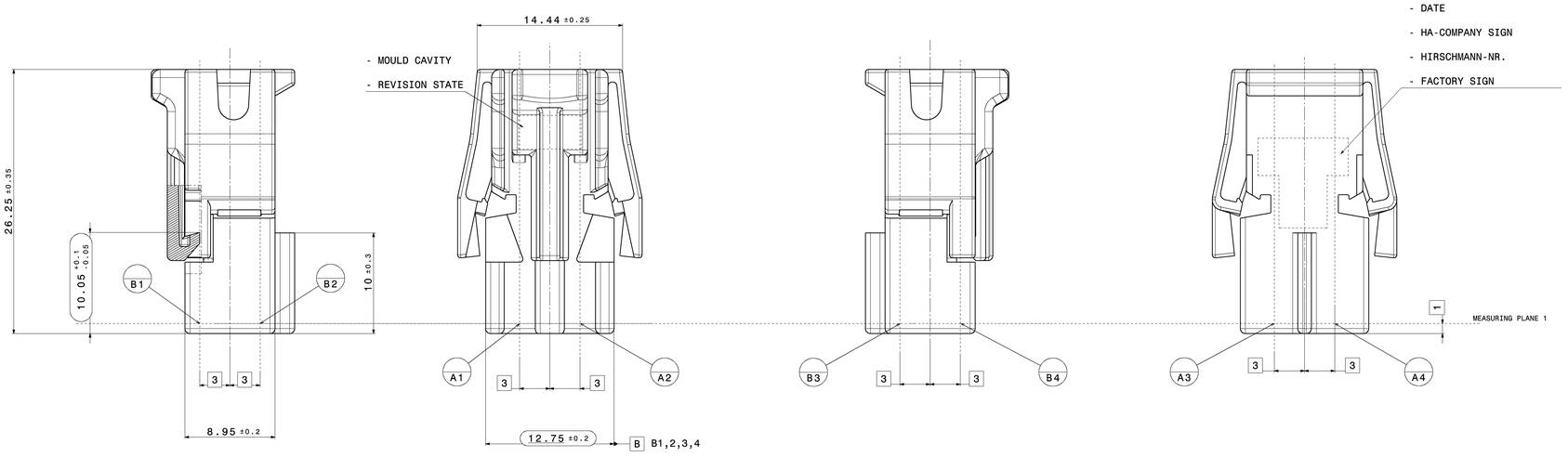

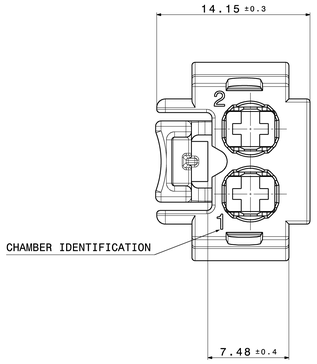

PART NUMBER:	REVISION:	CODING:	COLOR:
706-450-515	A	E	MAY GREEN, SIMILAR RAL6017
706-450-514	A	D	CLARET VIOLET, SIMILAR RAL4004
706-450-513	A	C	BLUE, SIMILAR RAL5012
706-450-512	A	B	NATURE
706-450-511	A	A	BLACK, SIMILAR RAL9011

GENERAL TOLERANCES FOR UNTOLERATED DIMENSIONS:
1. ANGLE-DIMENSIONS [°]
   TOLERANCE FOR ALL ANGLE-DIMENSIONS: ±2°
2. RADII: [mm]

bis 1	1-3	3-10	10-20	20-30	30-50
±0.2	±0.3	±0.4	±0.5	±1	±2

3. DISTANCE-DIMENSIONS: DIN 2768-mH-E
4. GENERAL TOLERANCE FOR SYMMETRY: 0.3

CONNECTOR KEY-FACTS:

CONTACT CHAMBER:	1-2
CONTACT SYSTEM:	2.8mm
MAX. WSR [mm²]	4mm²
MAX. ISO-Ø [mm]	MAX. INSULATION DIAMETER FOR 2.8:SEE RELEASED CONTACT DRAWING
DYNAMIC LOAD ACC EPS-100095-00	SG1 SURFACE: Sn
TEMPERATURE AREA (1000h) ACC EPS-100095-00	+130°C
FLAME RESISTANCE ACC UL94 (ACC. DATA SHEET)	HB (1.6mm WALL THICKNES)

ADDITIONAL VALID DOCUMENTS:

	HA NUMBER:
MATCHING TO INTERFACE CONNECTION:	872-929-...00
MATCHING TERMINAL:	Tyco C-1355036 Delphi 15457850
MATCHING COUNTERPART HIRSCHMANN:	706-650-...00
PRODUCT SPECIFICATION:	EPS-100095-00
PROCESSING SPECIFICATION:	EVS-100095-00
D-VALIDATION PLAN (FIRST RELEASE):	DVP-102826-00
SPECIFICATION:	EPH-100017-00

COMMENTS:
1. CODING A IS SHOWN
2. DELIVERY STATUS AS DRAWN
3. ENGLISH TEXT IS VALID
4. MISSING DIMENSIONS SEE CAD-MODEL. THEREFORE THE GENERAL-TOLERANCES ARE VALID
5. DESIGN DEVIATIONS COMPARED WITH DETAIL DRAWINGS ARE INSIGNIFICANT. THE DETAIL DRAWINGS ARE VALID.
6. PART CORRESPONDS TO EU SCRAP CAR GUIDELINE 2000/53/EG
7. CHANGES BASED ON TECHNICAL PROGRESS ARE IN THE DECISION OF THE MANUFACTURER! DETAILS OF IMPLEMENTATION ARE LEFT TO MANUFACTURER.
8. MAX. 30% ~~/~~NO RECLAIM PERMITTED
9. PART IDENTIFICATION SIMILAR DIN 1451
10. DRAFT ANGLE WITHIN TOLERANCE.
11. MAX. SPLIT LINE 0.1
12. MAX. BURR 0.3
13. DIMENSIONS MARKED WITH ( ) ARE DOCUMENTED IN THE INITIAL SAMPLE INSPECTION REPORT (ISIR). UNMARKED DIMENSIONS ARE ALSO MEASURED BUT NOT DOCUMENTED IN THE ISIR. VARIATIONS MUST BE CORRECTED.

±0.2 ±0.2

Version	Num. of	Description of alteration	Date	drwn
00		Ersterstellung / Initial edition	28.07.2021	ALI

Test instructions

Crude state	Material PBT-GF30	Final state	Gross weight g/pc
			Final weight g/pc

Material-No.			
Tolerances	Siehe Tabelle	Surface	cm²/pc
Edges	DIN ISO 13715	Scale 5:1	Scrap %
Geometric tolerances	DIN ISO 1101	dimensions in millimeters	CAD System/ Version CATIA V5

	Date	Name
Drawn	28.07.2021	J.Neu81
Checked	15.03.2022	T.Bürk
Released	15.03.2022	T.Bürk

Dimensions specially checked for acceptation

Title: 2way 2.8 EasyConn F Connector Neutral

Type

DIN A0

CD1

HIRSCHMANN AUTOMOTIVE

Owner Tonnelweg 6-8 A-6850 Dornbirn/Austria

RS

Drawing - No. 706-450-...00

Sheet 1 of 1

Origin | Replacement | DMR 10000038745

Controlled status available in the system!

This material is protected by copyright. Reproduction or transmission to third parties is not permitted without the author's consent.

Pdf from: EXDUWE on 13.11.2013 Doc-Vers. 00 Valid from: 20210318 Valid until: ... Status: Kundenfreigabe